VICKERS

Service Parts Information

Heavy Duty Piston Pump Standard/ Thru-Drive

PVE47*-**(M)(D)-22-C25(V)-21

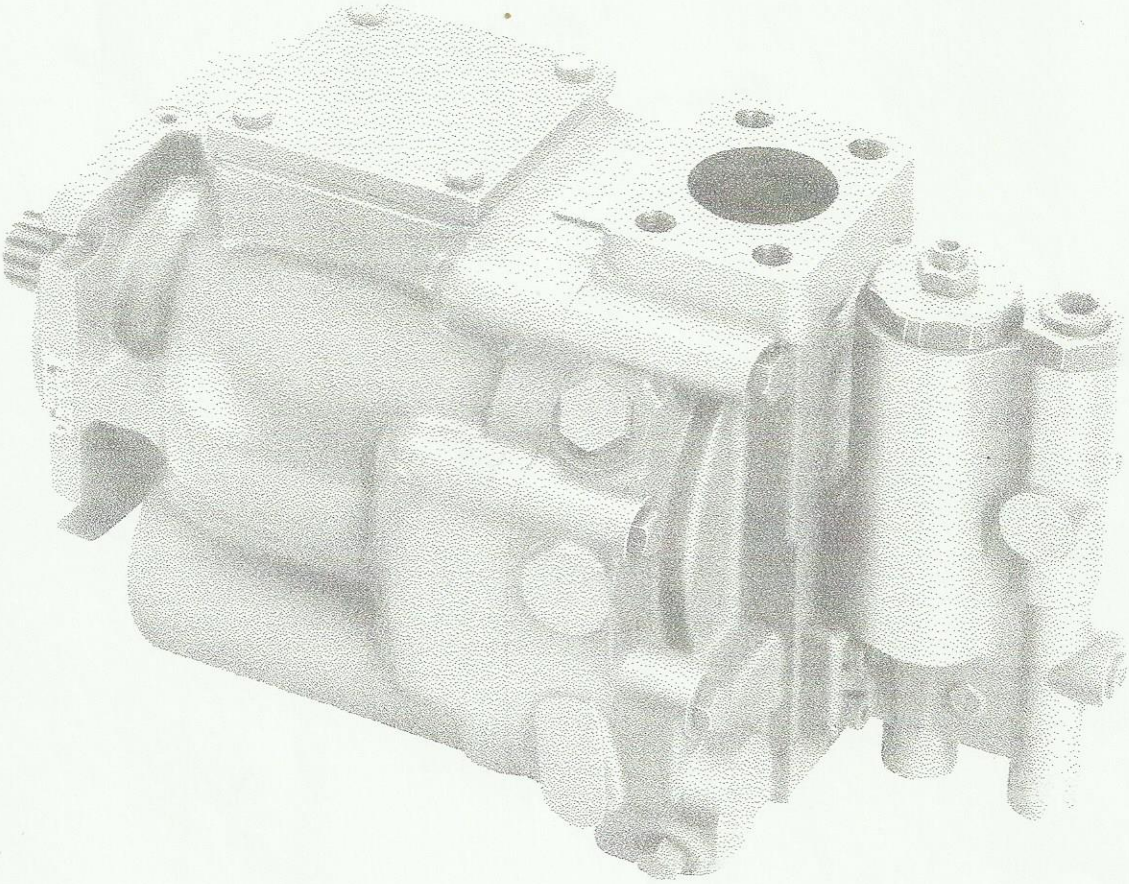

Vickers, Incorporated

1401 Crooks Road
Troy, Michigan 48084

RELEASED **12-1-86** **M-2248-S**

*475407 'C' PRESSURE COMPENSATOR S/A PRESET AT 250 bar.

*475405 'CVP' LOAD SENSING/PRESSURE LIMITER COMPENSATOR S/A SHIPPED AT APPROXIMATELY: LOAD SENSING DIFFERENTIAL PRESSURE 20 bar. PRESSURE LIMITER 250 bar.

HOUSING	SHAFT SEAL
939932	SINGLE
939929	DOUBLE

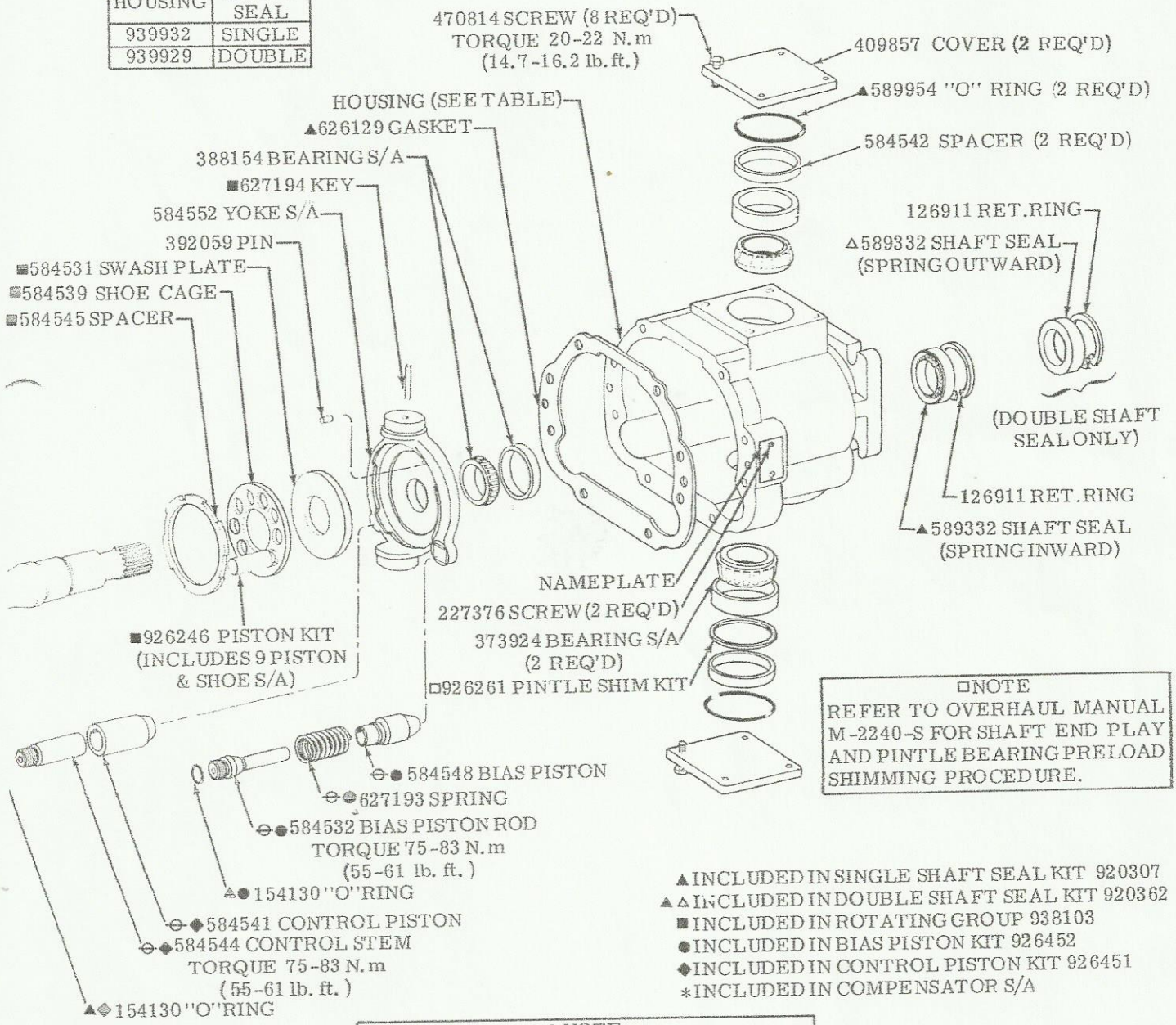

□NOTE
REFER TO OVERHAUL MANUAL M-2240-S FOR SHAFT END PLAY AND PINTLE BEARING PRELOAD SHIMMING PROCEDURE.

▲ INCLUDED IN SINGLE SHAFT SEAL KIT 920307
▲△ INCLUDED IN DOUBLE SHAFT SEAL KIT 920362
■ INCLUDED IN ROTATING GROUP 938103
● INCLUDED IN BIAS PISTON KIT 926452
◆ INCLUDED IN CONTROL PISTON KIT 926451
* INCLUDED IN COMPENSATOR S/A

⊖NOTE
PARTS ARE SHOWN FOR LEFT HAND SHAFT ROTATION. THE POSITION OF CONTROL AND BIAS PISTONS ARE REVERSED FOR RIGHT HAND ROTATION.

THRU-DRIVE MODELS

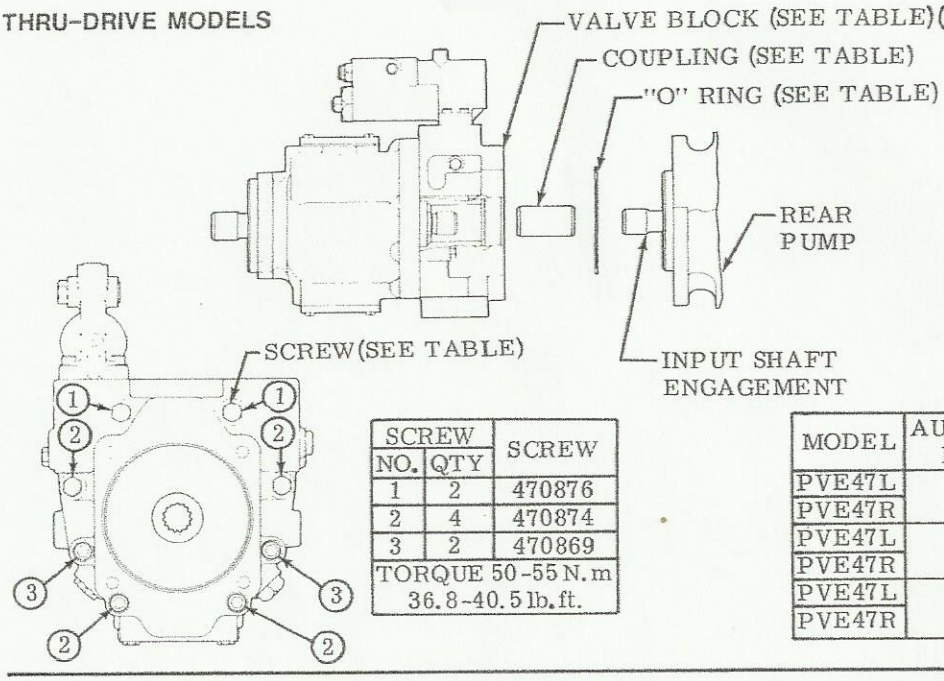

INPUT SHAFT ENGAGEMENT (REAR PUMP)	COUPLING
SAE-A	430359
SAE-B	430360
SAE-BB	429368
SAE-C	429369
SAE-CC	682898

SCREW NO.	SCREW QTY	SCREW
1	2	470876
2	4	470874
3	2	470869
TORQUE 50-55 N.m 36.8-40.5 lb.ft.		

MODEL	AUX.MTG PAD	VALVE BLOCK (THRU-DRIVE)	"O"RING
PVE47L	A	939974	576601
PVE47R		939993	
PVE47L	B	939946	401525
PVE47R		939980	
PVE47L	C	939948	353264
PVE47R		939950	

MODEL CODE BREAKDOWN

PVE47*-(M)(D)-22-C25V-21**

- PUMP
- VARIABLE
- E SERIES
- FLOW RATING @1800 RPM 47 - 47 GPM (6.0 CIR)
- SHAFT ROTATION (VIEWED FROM SHAFT END) R - RIGHT HAND (CW) L - LEFT HAND (CCW)
- PORTS & CONFIGURATION
  - BLANK - SIDE PORT, FLANGED REAR MOUNT CONTROL
  - H - SIDE PORT 'A' PAD AUX. MOUNT, SIDE MOUNT CONTROL
- THRU DRIVE CONFIGURATION
  - A - SIDE PORT 'A' PAD AUX. MOUNT, SIDE MOUNT CONTROL
  - B - SIDE PORT 'B' PAD AUX. MOUNT, SIDE MOUNT CONTROL
  - C - SIDE PORT 'C' PAD AUX. MOUNT. SIDE MOUNT CONTROL
- INPUT SHAFT
  - 1 - STRAIGHT KEYED
  - 2 - SPLINED
  - 3 - SPLINED
- PORT DESIGNATION (4 BOLT FLANGE) BLANK-SAE I-518 M-ISO/DIS 6162
- SHAFT SEAL BLANK-SINGLE D-DOUBLE
- PUMP DESIGN
- CONTROL OPTION C - PRESS. COMP.
- PRESS. COMP. SETTING 25 - 250 bar (3625 PSI)
- CONTROL OPTION V-LOAD SENSING PRESS. LIMITING
- CONTROL DESIGN

For satisfactory service life of these components, use full flow filtration to provide fluid which meets ISO cleanliness code 19/15 or cleaner. Selections from Vickers OFP, OFR, and OFRS series are recommended.

Litho in U. S. A.